marathon®

marathon® Motors

MARATHON XGA SERIES

HIGH EFFICIENCY CAST IRON MOTORS
SIZES 80 - 280, 0.75 - 110 KW,

REGAL®

MARATHON XGA SERIES HIGH EFFICIENCY CAST IRON MOTORS SIZES 80 TO 280, 0.75 TO 110 KW, THREE PHASE

INTRODUCTION	**3**
Motor Design	3
Standards and Specifications	3
Operating Parameters	3
PART NUMBER LOGIC	**4**
PERFORMANCE DATA	**4 - 6**
DIMENSIONAL DRAWINGS	**7- 9**
XGA MODIFICATION OPTIONS	**10 - 11**

INTRODUCTION

Regal Australia's XGA series motors are an ideal example of Regal Australia's enhanced performance motors.
Manufactured in our state of the art facility, Regal Australia has developed the Marathon XGA series to meet the demands of more efficient electric motors. The Marathon XGA series complies with Australian standards for high efficiency (MEPS2).

MOTOR DESIGN

Featuring a cast iron body and end shields the XGA series is ideal for most applications including mining, industrial and agriculture. Low temperature rise ensures the XGA series will perform well in all applications and is backed by a two-year warranty.

MEPS2 compliance (High Efficiency)

The XGA range of motors comply to AS/NZS 1359.5.2004 Table A3 for High Efficiency motors, that is equivalent to IE3 (premium efficiency) of the international standard IEC 60034-30.
Efficiencies listed in the performance data tables are determined by Test Method A based on AS/NZS 1359.102.3 (similar to IEC 60034-2-1).
The alternative Test Method B produces slightly inflated efficiency figures when compared to Test Method A. This is because Method B is based on stray load losses being fixed at 0.5% of input power while Method A is based on measuring actual stray load losses or assigning a level that is more realistic.

STANDARDS AND SPECIFICATIONS

The main dimensions and rated outputs of the XGA series generally conform to Australian Standard AS/NZS1359 (CENELEC kW-frame size allocation table) and International Standards IEC 60034 and IEC 60072.

OPERATING PARAMETERS

Standard XGA motors are designed with the following parameters:

- Continuous duty (S1)
- Three phase 380-415 Volts, 50Hz power supply
- Ambient temperatures up to 40°C
- Installation at altitudes up to 1000 metres
- Connection:
  - 230 Volt Delta/400 Volt Star (3kW and below)
  - 400 Volt Delta/690 Volt Star (4kW and above)

Performance data is based on these parameters and may need adjustment for different requirements.

F class insulation

XGA series motors have F class insulation and B class temperature rise (80K). This design feature allows the motor to run cooler and increases the thermal margin ensuring longer running life.

Degree of protection

Standard level of enclosure protection is IP55; increased ratings to IP66 are available upon request.

Paint finish

Standard surface finish is high quality enamel with final colour being Patina Green (RAL 6000), other colours are available upon request.

Bearings

As standard, frame sizes 80 to 180 have high quality deep groove ball bearings and are sealed for life. Frame sizes 200 to 280 use an open type bearing allowing for regreasing of the motor during operation. Grease nipples are fitted to the end shields with the grease relief blanked off by means of a removable plug.

Motor frame	Bearing Size (DE / NDE)	
80	6204ZZ	6204ZZ
90	6205ZZ	6205ZZ
100	6206ZZ	6206ZZ
112	6306ZZ	6306ZZ
132	6308ZZ	6206ZZ
160 - 2	6209ZZ	6209ZZ
160 - 4, 6, 8	6309ZZ	6209ZZ
180 - 2	6211ZZ	6211ZZ
180 - 4, 6, 8	6311ZZ	6210ZZ
200 - 2	6212	6212
200 - 4, 6, 8	6312	6311
225 - 2	6312	6312
225 - 4, 6, 8	6314	6313
250 - 2	6313	6313
250 - 4, 6, 8	6316	6315
280 - 2	6314	6314
280 - 4, 6, 8	6319	6317

Terminal box

As standard the terminal box for the XGA series is located on the right hand of the motor with the conduit entries facing to the bottom when viewed from the drive end. Alternatively the terminal box can be rotated for left hand or rear facing conduit entries.

PART NUMBER LOGIC

When placing an order the motor product code should be specified. The product code of the motor is composed in accordance with the following example:

M	3	4	0 0 1 5 0	3	X G A	
1	2	3	4-8	9	10 - 12	13

Position 1
M = metric frame size

Position 2
Phase
3 = three phase single speed motor

Position 3
Number of poles
2 = 2 poles **4** = 4 poles
6 = 6 poles

Positions 4 to 8
Rated power output
(kW x 100)

Position 9
Mounting arrangement
1 = V1 **3** = B3
4 = B3/B5 **5** = B5
6 = B3/B14A **7** = B14A
8 = B3/B14B **9** = B14B

Positions 10 to 12
Series
XGA = Regal Australia XGA series motors

Positions 13
Variation suffix
Blank = Standard
1 = High output design

PERFORMANCE DATA

XGA SERIES, THREE PHASE, 380 - 415V 50 HZ IP55, F CLASS INSULATION

Motor frame	kW	Speed [r/min]	415V 50Hz											380V 50Hz	415V 50Hz	Moment of inertia J=¼GD² [kg m²]	Weight of foot mount motor [kg]
			Efficiency %			Power factor			Current		Torque			Current	Current		
			at % full load			at % full load			Full load I_N [A]	Locked rotor I_L/I_N	Full load T_N [Nm]	Locked rotor T_L/T_N	Break down T_B/T_N	Full load I_N [A]	Full load I_N [A]		
			100 [%]	75 [%]	50 [%]	100 [%]	75 [%]	50 [%]									
3000 r/min = 2 POLES																	
80A	0.75	2880	**82.5**	82.9	81.0	**0.80**	0.73	0.60	1.64	7.6	2.5	3.3	3.6	1.65	1.63	0.0008	20
80B	1.1	2880	**84.8**	85.5	84.5	**0.84**	0.77	0.66	2.2	8.5	3.6	3.5	3.9	2.3	2.2	0.0010	21
90S	1.5	2890	**86.2**	87.3	86.9	**0.85**	0.80	0.69	2.9	8.0	5.0	3.0	3.5	3.1	2.9	0.0018	26
90L	2.2	2880	**86.5**	87.5	87.1	**0.88**	0.83	0.74	4.2	8.2	7.3	3.2	3.9	4.4	4.1	0.0023	29
100L	3	2890	**87.8**	89.4	89.6	**0.90**	0.86	0.79	5.5	8.5	9.9	2.9	3.5	5.8	5.4	0.0040	37
112M	4	2905	**88.4**	89.7	90.0	**0.92**	0.89	0.83	7.1	8.6	13.1	2.5	3.5	7.5	6.9	0.0082	44
132S	5.5	2915	**89.4**	90.2	89.8	**0.88**	0.84	0.76	10.0	6.2	18.0	1.8	3.1	10.5	9.8	0.0164	82
132SB	7.5	2910	**90.0**	91.2	91.3	**0.91**	0.89	0.82	13.2	6.2	24.6	1.8	2.9	13.5	13.0	0.0190	86
160M	11	2945	**91.1**	91.3	90.5	**0.88**	0.85	0.77	19.7	7.2	35.7	2.4	3.3	20.6	18.9	0.0652	142
160MB	15	2950	**92.1**	92.6	92.3	**0.91**	0.87	0.79	25.9	7.5	48.6	2.4	3.3	26.0	25.9	0.0745	150
160L	18.5	2955	**92.1**	92.3	91.6	**0.91**	0.88	0.79	32.0	7.6	59.8	2.5	3.3	32.2	31.7	0.0884	168
180M	22	2965	**92.6**	92.8	92.0	**0.90**	0.86	0.77	38.3	8.0	70.9	2.5	3.5	39.3	38.2	0.139	210
200L	30	2970	**93.1**	93.1	91.5	**0.88**	0.85	0.76	53.0	7.7	96.5	2.4	3.4	55.8	51.1	0.226	272
200LB	37	2975	**93.6**	93.6	92.8	**0.92**	0.88	0.80	62.2	8.1	119.0	2.3	3.6	62.4	62.1	0.281	300
225M	45	2975	**93.9**	93.8	92.8	**0.91**	0.88	0.81	75.9	7.8	144.0	2.3	3.4	76.8	75.3	0.362	386
250M	55	2975	**94.2**	93.9	92.8	**0.92**	0.88	0.81	91.9	8.8	177.0	3.0	3.9	92.0	91.6	0.722	562
280S	75	2985	**94.8**	94.0	92.8	**0.87**	0.85	0.79	131.8	7.4	240.0	2.6	3.5	137.4	123.3	1.126	792
280M	90	2985	**95.0**	94.9	94.0	**0.93**	0.90	0.84	147.4	8.1	288.0	2.8	3.8	147.6	147.2	1.365	858
280MB*	110	2985	**95.3**	95.0	93.9	**0.93**	0.91	0.85	179.8	7.8	352.0	2.6	3.5	180.3	178.7	1.473	892

*High output design. The output of this motor is one step higher than the basic design with rated outputs in accordance with CENELEC.

PERFORMANCE DATA

XGA SERIES, THREE PHASE, 380 - 415V 50 HZ
IP55, F CLASS INSULATION

Motor frame	kW	Speed [r/min]	400V 50Hz											380V 50Hz	400V 50Hz	Moment of inertia J=¼GD² [kg m²]	Weight of foot mount motor [kg]
			Efficiency %			Power factor			Current		Torque			Current	Current		
			at % full load			at % full load			Full load I_N [A]	Locked rotor I_L/I_N	Full load T_N [Nm]	Locked rotor T_L/T_N	Break down T_B/T_N	Full load I_N [A]	Full load I_N [A]		
			100 [%]	75 [%]	50 [%]	100 [%]	75 [%]	50 [%]									
1500 r/min = 2 POLES																	
80B	0.75	1430	**82.9**	84.0	83.2	**0.72**	0.65	0.53	1.80	6.4	5.0	2.7	3.0	1.82	1.79	0.0020	22
90S	1.1	1435	**85.0**	84.9	82.8	**0.77**	0.69	0.56	2.4	7.8	7.3	3.4	3.9	2.5	2.5	0.0030	27
90L	1.5	1440	**85.8**	86.1	84.4	**0.79**	0.71	0.58	3.2	8.0	9.9	4.2	4.3	3.3	3.3	0.0037	32
100LA	2.2	1475	**86.9**	86.9	87.4	**0.80**	0.80	0.74	4.6	8.2	14.2	2.8	3.1	4.7	4.6	0.0060	38
100LB	3	1450	**88.2**	88.5	87.0	**0.81**	0.75	0.61	6.1	8.7	19.8	2.8	3.8	6.3	6.1	0.0070	42
112M	4	1440	**88.7**	89.3	88.6	**0.83**	0.78	0.67	7.8	7.0	26.5	2.0	3.0	8.2	7.8	0.0207	48
132S	5.5	1465	**89.9**	90.5	90.0	**0.81**	0.78	0.69	10.9	4.8	35.9	1.5	2.4	11.4	10.7	0.0456	91
132M	7.5	1460	**90.4**	91.5	91.7	**0.84**	0.81	0.73	14.2	5.1	49.1	1.5	2.4	14.4	14.0	0.0532	97
160M	11	1465	**91.3**	90.7	89.7	**0.81**	0.76	0.66	21.6	5.2	71.7	2.0	2.6	22.6	20.9	0.118	140
160L	15	1465	**92.1**	91.9	91.3	**0.83**	0.76	0.64	28.5	5.9	97.8	2.2	2.8	28.8	28.4	0.159	170
180M	18.5	1475	**92.4**	92.5	92.0	**0.82**	0.77	0.66	35.4	5.4	120.0	2.0	2.7	37.0	34.1	0.214	211
180L	22	1480	**92.8**	91.8	90.6	**0.79**	0.71	0.60	43.6	6.4	142.0	2.4	3.2	44.0	43.2	0.271	241
200L	30	1480	**93.4**	93.6	93.4	**0.88**	0.85	0.78	53.0	5.6	194.0	1.5	2.6	53.4	52.6	0.525	290
225S	37	1480	**93.8**	93.8	93.1	**0.84**	0.80	0.71	68.2	5.6	239.0	1.8	2.7	69.1	65.5	0.595	373
225M	45	1485	**94.1**	93.5	90.4	**0.82**	0.82	0.73	81.5	6.0	289.0	1.9	2.8	81.7	81.1	0.744	423
250M	55	1485	**94.4**	94.4	93.4	**0.88**	0.86	0.77	95.3	7.5	354.0	2.5	3.4	96.3	93.4	1.470	570
280S	75	1490	**94.9**	95.0	94.2	**0.88**	0.85	0.78	129.3	6.3	481.0	2.3	3.2	129.9	125.5	2.524	820
280M	90	1490	**95.2**	95.2	94.0	**0.90**	0.88	0.81	152.3	6.7	577.0	2.7	3.3	153.2	150.4	3.119	905
280MB*	110	1490	**95.5**	95.5	94.9	**0.90**	0.87	0.79	185.1	7.3	705.0	2.7	3.3	185.9	184.2	3.632	983

*High output design. The output of this motor is one step higher than the basic design with rated outputs in accordance with CENELEC.

PERFORMANCE DATA

XGA SERIES, THREE PHASE, 380 - 415V 50 HZ
IP55, F CLASS INSULATION

Motor frame	kW	Speed [r/min]	400V 50Hz											380V 50Hz	415V 50Hz	Moment of inertia J=¼GD² [kg m²]	Weight of foot mount motor [kg]
			Efficiency %			Power factor			Current		Torque			Current	Current		
			at % full load			at % full load			Full load I_N [A]	Locked rotor I_L/I_N	Full load T_N [Nm]	Locked rotor T_L/T_N	Break down T_B/T_N	Full load I_N [A]	Full load I_N [A]		
			100 [%]	75 [%]	50 [%]	100 [%]	75 [%]	50 [%]									
1000 r/min = 6 POLES																	
90S	0.75	930	**79.8**	80.9	79.3	**0.73**	0.64	0.52	1.85	5.0	7.7	2.3	2.6	1.90	1.85	0.0036	27
90L	1.1	930	**82.9**	83.3	80.8	**0.75**	0.66	0.51	2.6	5.8	11.3	2.8	2.8	2.6	2.6	0.0053	29
100L	1.5	950	**83.0**	83.6	82.0	**0.74**	0.66	0.53	3.5	6.2	15.1	2.2	3.0	3.6	3.6	0.0080	37
112M	2.2	955	**84.3**	85.1	83.7	**0.72**	0.65	0.52	5.2	5.8	22.0	2.1	2.8	5.4	5.3	0.0278	47
132S	3	970	**85.6**	86.4	86.2	**0.77**	0.70	0.60	6.6	5.4	29.5	1.7	2.4	6.7	6.6	0.0410	76
132M	4	970	**86.7**	87.7	87.1	**0.77**	0.73	0.63	8.7	5.7	39.4	2.1	2.5	9.0	8.5	0.0579	85
132MB	5.5	970	**87.9**	88.6	88.4	**0.77**	0.72	0.63	11.8	5.6	54.1	1.6	2.5	12.1	11.7	0.0724	94
160M	7.5	970	**89.0**	89.0	87.5	**0.76**	0.71	0.60	16.1	4.3	73.8	1.4	2.4	16.8	15.5	0.148	151
160L	11	980	**90.2**	90.3	89.4	**0.76**	0.70	0.59	23.1	4.8	107.0	1.5	2.3	23.6	23.2	0.221	168
180L	15	980	**91.0**	91.2	90.5	**0.76**	0.70	0.59	31.2	4.8	146.0	1.8	2.4	31.2	31.0	0.386	226
200L	18.5	985	**91.6**	91.8	91.1	**0.80**	0.76	0.66	36.4	4.4	179.0	1.4	2.2	38.8	36.0	0.589	267
200LB	22	985	**92.1**	92.2	90.7	**0.80**	0.76	0.67	43.3	4.1	213.0	1.5	2.1	43.4	42.8	0.690	288
225M	30	985	**92.8**	93.0	92.0	**0.83**	0.79	0.69	56.1	5.4	291.0	2.0	2.6	56.1	55.8	1.066	408
250M	37	990	**93.3**	93.4	92.4	**0.83**	0.79	0.69	68.8	5.8	357.0	2.2	2.7	69.6	68.2	1.800	520
280S	45	990	**93.7**	93.9	93.0	**0.84**	0.81	0.73	82.2	5.4	434.0	1.5	2.4	82.8	79.9	2.336	701
280M	55	990	**94.1**	91.1	93.0	**0.87**	0.85	0.77	97.1	6.2	531.0	1.8	2.7	97.7	96.4	2.828	752
280MB*	75	990	**94.6**	94.7	93.9	**0.88**	0.85	0.77	130.4	6.5	723.0	1.9	2.7	130.6	130.1	3.996	868

*High output design. The output of this motor is one step higher than the basic design with rated outputs in accordance with CENELEC.

DIMENSIONAL DRAWINGS

FOOT MOUNT B3 (IM1001)

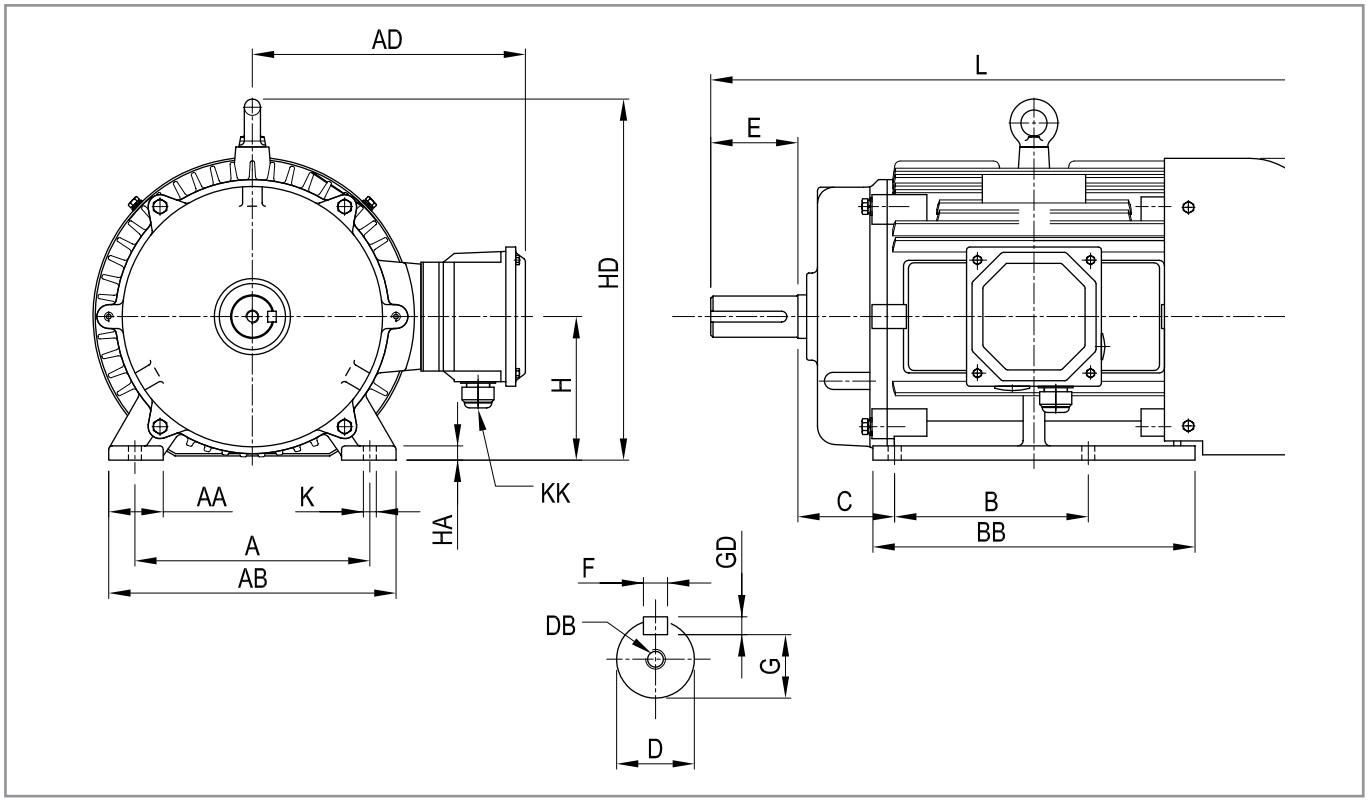

CENELEC Frame allocations

Motor frame		A	AA	AB	AC	AD	B	BB	C	D	DB	E	F	GD	G	H	HA	HD	K	KK	L
80	-19	125	35	160	172	165	100	150	50	19	M6	40	6	6	15.5	80	10	170	10	2 x M20 x 1.5	310
90S	-24	140	36	176	185	170	100	160	56	24	M8	50	8	7	20	90	12	195	10	2 x M20 x 1.5	340
90L	-24	140	36	176	185	170	125	185	56	24	M8	50	8	7	20	90	12	195	10	2 x M20 x 1.5	365
100L	-28	160	40	200	205	185	140	215	63	28	M10	60	8	7	24	100	14	245	12	2 x M20 x 1.5	410
112M	-28	190	50	240	225	190	140	225	70	28	M10	60	8	7	24	112	15	265	12	2 x M25 x 1.5	460
132S	-38	216	50	264	292	251	140	257	89	38	M12	80	10	8	33	132	13	336	12	2 x M25 x 1.5	527
132M	-38	216	50	264	292	251	178	296	89	38	M12	80	10	8	33	132	13	336	12	2 x M25 x 1.5	563
160M	-42	254	65	309	345	290	210	323	108	42	M16	110	12	8	37	160	15	390	15	2 x M32 x 1.5	686
160L	-42	254	65	309	345	290	254	353	108	42	M16	110	12	8	37	160	15	390	15	2 x M32 x 1.5	716
180M	-48	279	70	349	384	310	241	400	121	48	M16	110	14	9	42.5	180	17	435	15	2 x M40 x 1.5	756
180L	-48	279	70	349	384	310	279	430	121	48	M16	110	14	9	42.5	180	17	435	15	2 x M40 x 1.5	786
200L	-55	318	73	390	436	357	305	446	133	55	M20	110	16	10	49	200	19	482	19	2 x M50 x 1.5	834
225S	-60	356	75	431	482	369	286	460	149	60	M20	140	18	11	53	225	26	545	19	2 x M50 x 1.5	910
225M	-60	356	76	431	482	369	311	505	149	60*	M20	140*	18*	11*	53*	225	26	545	19	2 x M50 x 1.5	960*
250M	-65	406	80	484	531	422	349	545	168	65*	M20	140*	18*	11*	58*	250	26	620	24	2 x M50 x 1.5	1028*
280S	-75	457	85	542	589	498	368	650	190	75*	M20	140*	20*	12*	67.5*	280	36	692	24	2 x M50 x 1.5	1191*
280M	-75	457	85	542	589	498	419	650	190	75*	M20	140*	20*	12*	67.5*	280	36	692	24	2 x M50 x 1.5	1191*

High output design - CENELEC +1 frame allocations (XGA1)

280MB	-80	457	85	542	589	498	419	650	190	80*	M20	140*	22*	14*	71*	280	36	692	24	2 x M50 x 1.5	1191

*** 2 Pole Variances**

Motor frame		D	E	F	GD	G	L
225M	-55	55	110	16	10	49	930
250M	-60	60	140	18	11	58	1028
280S	-65	65	140	18	11	58	1191
280M	-65	65	140	18	11	58	1191

DIMENSIONAL DRAWINGS

FLANGE MOUNT B5 (IM3001)

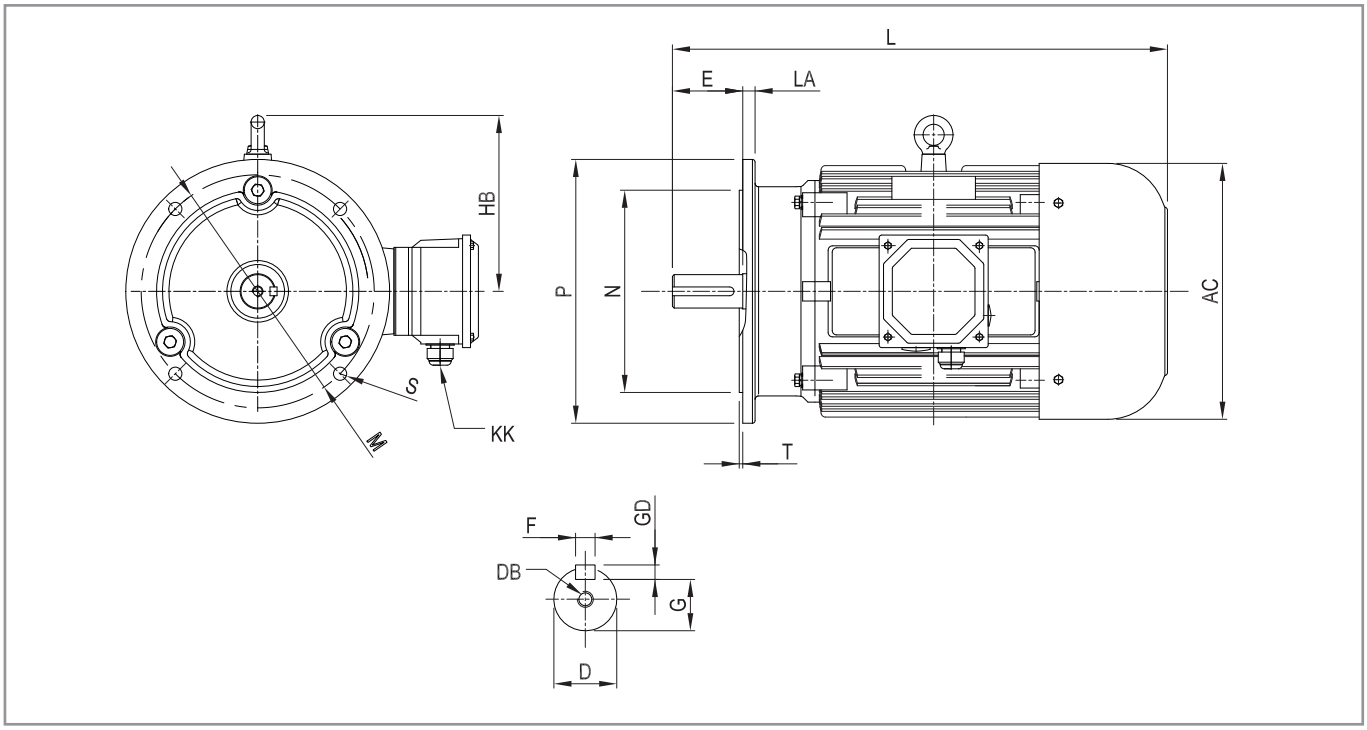

CENELEC Frame allocations

Motor frame		AC	AD	D	DB	E	F	GD	G	HB	KK	L	LA	M	N	P	S	T
80	-19	172	165	19	M6	40	6	6	15.5	90	2 x M20 x 1.5	310	12	165	130	200	12	3.5
90S	-24	185	170	24	M8	50	8	7	20	105	2 x M20 x 1.5	340	12	165	130	200	12	3.5
90L	-24	185	170	24	M8	50	8	7	20	105	2 x M20 x 1.5	365	12	165	130	200	12	3.5
100L	-28	205	185	28	M10	60	8	7	24	145	2 x M20 x 1.5	410	12	215	180	250	15	4.0
112M	-28	225	190	28	M10	60	8	7	24	153	2 x M25 x 1.5	460	12	215	180	250	15	4.0
132S	-38	292	251	38	M12	80	10	8	33	205	2 x M25 x 1.5	527	15	265	230	300	15	4.0
132M	-38	292	251	38	M12	80	10	8	33	205	2 x M25 x 1.5	563	15	265	230	300	15	4.0
160M	-42	345	290	42	M16	110	12	8	37	233	2 x M32 x 1.5	686	16	300	250	350	19	5.0
160L	-42	345	290	42	M16	110	12	8	37	233	2 x M32 x 1.5	716	16	300	250	350	19	5.0
180M	-48	384	310	48	M16	110	14	9	42.5	251	2 x M40 x 1.5	756	18	300	250	350	19	5.0
180L	-48	384	310	48	M16	110	14	9	42.5	251	2 x M40 x 1.5	786	18	300	250	350	19	5.0
200L	-55	436	357	55	M20	110	16	10	49	257	2 x M50 x 1.5	834	18	350	300	400	19	5.0
225S	-60	482	369	60	M20	140	18	11	53	265	2 x M50 x 1.5	910	20	400	350	450	19	5.0
225M	-60	482	369	60*	M20	140*	18*	11*	53*	265	2 x M50 x 1.5	960*	20	400	350	450	19	5.0
250M	-65	531	422	65*	M20	140*	18*	11*	58*	364	2 x M50 x 1.5	1028*	22	500	450	550	19	5.0
280S	-75	589	498	75*	M20	140*	20*	12*	67.5*	410	2 x M50 x 1.5	1191*	22	500	450	550	19	5.0
280M	-75	589	498	75*	M20	140*	20*	12*	67.5*	410	2 x M50 x 1.5	1191*	22	500	450	550	19	5.0

High Output Design - CENELEC +1 frame allocations (XGA1)

280MB	-80	589	498	80*	M20	140	22	14*	71*	410	2 x M50 x 1.5	1191*	22	500	450	550	19	5.0

***2 Pole variances**

Motor frame		E	F	GD	G	L
225M	-55	110	16	10	49	930
250M	-60	140	18	11	53	1028
280S	-65	140	18	11	58	1191
280M	-65	140	18	11	58	1191

DIMENSIONAL DRAWINGS

FACE MOUNT B14A (IM3601)

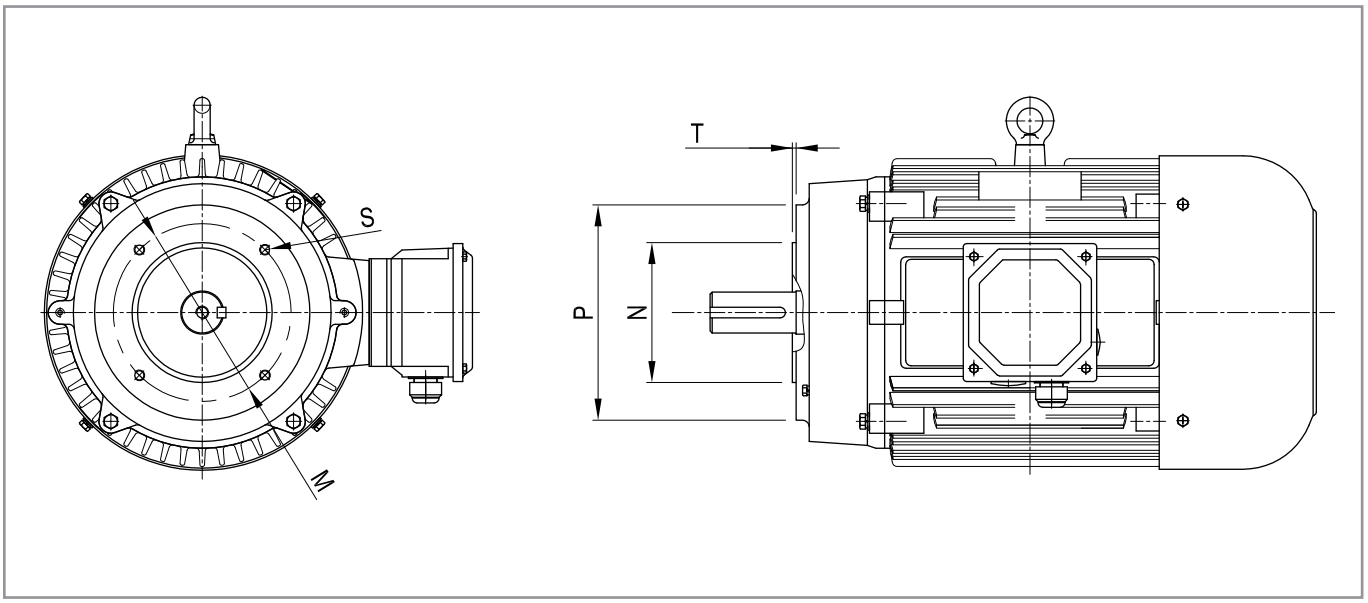

CENELEC Frame allocations

Motor frame		M	N	P	S	T
80	-19	100	80	120	M6	3
90S	-24	115	95	140	M8	3
90L	-24	115	95	140	M8	3
100L	-28	130	110	160	M8	3.5
112M	-28	130	110	160	M8	3.5
132S	-38	165	130	200	M10	3.5
132M	-38	165	130	200	M10	3.5

For motor frame and shaft dimensions, please refer to flange mount B5 dimensional drawings (Page 8)

XGA MODIFICATION OPTIONS

Additional to these motor ranges Regal Australia offer a large array of modifications available on order. These modifications are outlined below.

Terminal box
XGA motors come standard with a terminal box on the right hand side viewed from drive end. The following alternatives are available:

- Left hand terminal box - **XGAL**
- Removed terminal box (fitted with a blanking plate and threaded conduit entry. Extended leads, including eart connector) - **XGAF**

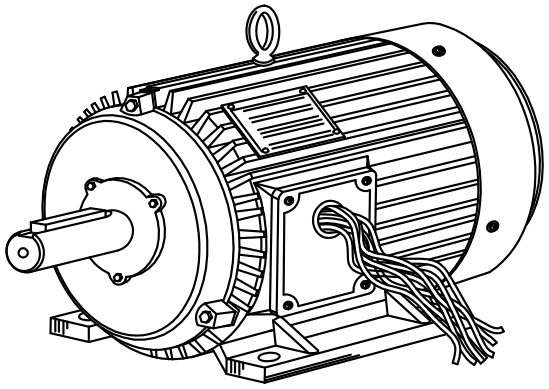

Extended leads: 1.5m
No. of power leads: 3+1 for up to 3kW, 6+1 for 4kW and above

Motor frame	Conduit Size
80-132	M25 x 1.5
160-180	M32 x 1.5
200-250	M50 x 1.5
280-315	M63 x 1.5

Bearings
Regal Australia can address applications where bearings need special consideration. Attention may need to be given to the following:

- Bearing monitors
- Alternative bearing types
- Low/high temperature bearing grease
- Oil seals
- Non contact labyrinth seals
- Insulated bearings

Shafts
XGA motors come standard with a single output shaft to Australian standard dimensions. The following alternatives are available:

- Double shaft extension
- Special shaft extension
- Stainless steel shaft material type

Environmental considerations
Where environmental factors need special consideration Regal Australia can provide the following modifications:

- Winding temperature monitors and thermistors (150oC PTC thermistors fitted to motors 160 frame and above as standard)
- Anti-condensation heaters
- Separately powered cooling blowers
- Tropic proofing
- Special paint finish
- Stainless steel name plates
- Higher Ingress Protection ratings, IP56, IP65 and IP66
- High thermal capacity motors – XGAH with H class insulation

Special performance
Regal Australia has the ability to provide XGA motors with special windings. These may include:
- Windings for alternative operating voltages and frequencies
- Windings designed for increased outputs and short time ratings

Accessories
Accessories available for Regal Australia XGA motors include:
- Slide rails (refer opposite page)
- VVVF drives
- Alternative paint colours
- Rain cowls
- Uni-directional and bi-directional low-noise fans

Testing services
Regal Australia can provide both type test certificates and individual motor test reports on any Regal Australia XGA motor.

Type test reports and outline drawings of standard motors are available at **www.regalaustralia.com.au**

Slide rails

Slide rails are designed for motor position adjustment when belt drives are used. Applications include tension adjustment for belt driven equipment.

Regal Australia stock slide rails to suit frame sizes 80 to 315. Rail sets are manufactured from cast iron and provided with mounting bolts and nuts between motor and rail.

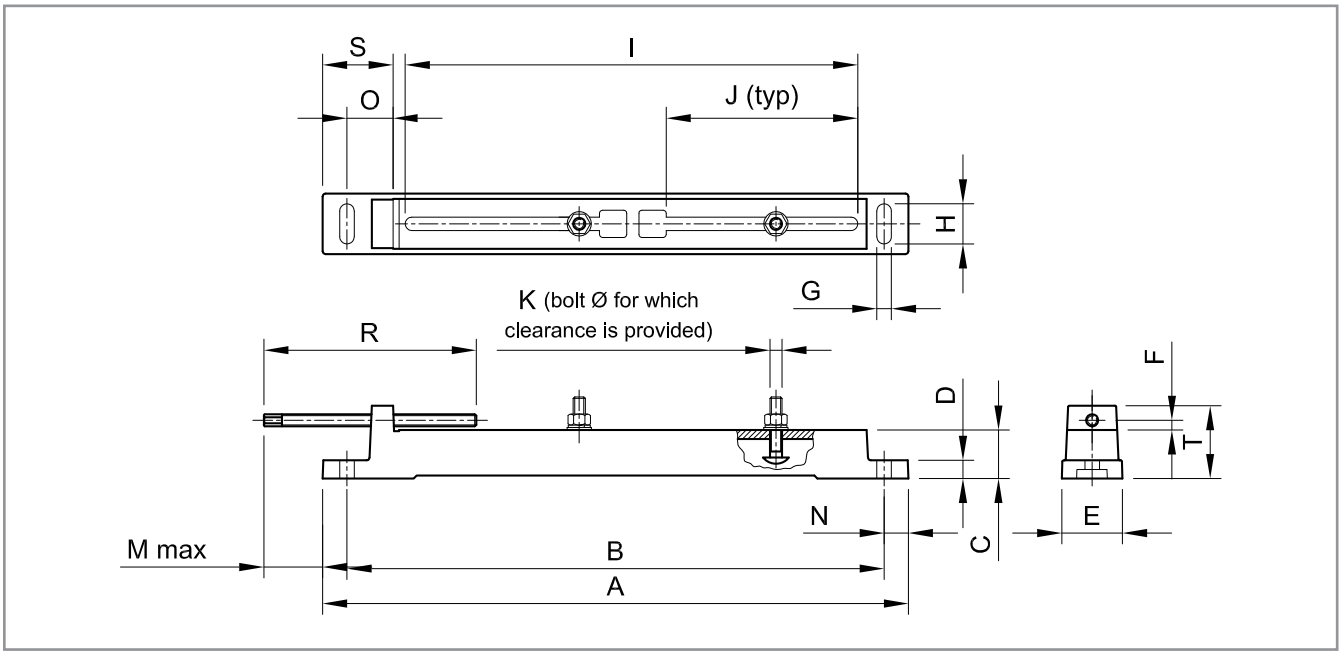

Slide rail dimensions

Slide rail product code	To suit motor frame	Dimensions [mm]																	Weight per set [kg]
		A	B	C	D	E	F	G	H	I	J	K	M	N	O	R	S	T	
MR080090	80 & 90	380	328	30	15	48	10	15	25	245	95	8	75	25	40	145	65	50	3
MR100132	100, 112 & 132	475	425	37	19	70	10	14	35	340	150	10	135	26	42	200	68	62	6.5
MR160180	160 & 180	567	515	48	19	72	11	18	35	390	162	12	115	28	57	200	85	70	10
MR200225	200 & 225	790	730	60	32	92	16	20	20	610	265	16	200	30	60	290	90	92	22
MR250280	250 & 280	945	870	70	38	105	16	21	21	725	305	20	240	35	70	350	105	110	40
MR315355	315 & 355	1220	1115	125	40	122	22	30	30	920	420	24	285	50	105	450	155	170	105

HEAD OFFICE
Regal Beloit Australia Pty Ltd ABN 61 122 303 084
19 Corporate Ave (PO Box 2340)
Rowville VIC 3178, AUSTRALIA
Customer Service: 1300 888 853
Fax: +61 3 9237 4050
www.regalaustralia.com.au

STATE OFFICES
VICTORIA
19 Corporate Avenue
Rowville VIC 3178
T: 1300 888 853
F: +61 3 9237 4050
NEW SOUTH WALES
8 Bushells Place
Wetherill Park NSW 2164
T: 1300 888 853
F: +61 2 8781 3131
QUEENSLAND
7 Mahogany Court
Willawong QLD 4110
T: 1300 888 853
F: +61 7 3246 3210
CAIRNS (Service • Repairs • Sales)
2/159-161 Newell Street
Bungalow QLD 4870
T: 1300 888 853
F: +61 7 4033 5553

PRESENT IN
MACKAY
SOUTH AUSTRALIA
WESTERN AUSTRALIA
T: 1300 888 853

NEW ZEALAND
Regal Beloit New Zealand Ltd
AUCKLAND
18 Jomac Place
Avondale
T: 0800 676 722
F: +64 9 820 8504

PRESENT IN
CHRISTCHURCH
ROTORUA
T: 0800 676 722

MALAYSIA
Torin Industries SND BHD (MALAYSIA)
No. 6536A Jalan Bukit Kemuning
Batu 6 Seksyen 34
40470 Shah Alam Selangor
T: +60 3 5124 6157
F: +60 3 5121 1467
SINGAPORE
Regal Beloit South East Asia Pte. Ltd.
12 Tuas Loop 637346
SINGAPORE
T: +65 6863 3473
F: +65 6863 3476
THAILAND
FASCO Motors (Thailand) Limited
29/7-8 Bangkruay-Sainoi Road
Bangkrang
Muang Nonthaburi District Nonthaburi 11000
THAILAND
T: +66 2447 3300
F: +66 2447 3500

APPLICATION CONSIDERATIONS

The proper selection and application of motors, motor control and components, including the related area of product safety, is the responsibility of the customer. Operating and performance requirements and potential associated issues will vary appreciably depending upon the use and application of such products and components. The scope of the technical and application information included in this publication is necessarily limited. Unusual operating environments and conditions, lubrication requirements, loading supports, and other factors can materially affect the application and operating results of the products and components and the customer should carefully review its requirements. Any technical advice or review furnished by Regal Beloit Australia Pty Ltd and its affiliates with respect to the use of products and components is given in good faith and without charge, and Regal assumes no obligation or liability for the advice given, or results obtained, all such advice and review being given and accepted at customer's risk.

For a copy of our Standard Terms and Conditions of Sale, Disclaimers of Warranty and Limitation of Liability, please contact Customer Service at 1300 888 853 or visit www.regalaustralia.com.au. These terms and conditions of sale, disclaimers and limitations of liability apply to any person who may buy, acquire or use a Regal Beloit Australia Pty Ltd product referred to herein, including any person who buys from a licensed distributor of these branded products.

Regal, Marathon and Marathon Motors are trademarks of Regal Beloit Corporation (USA) or one of its affiliated companies.

©2017 Regal Beloit Australia Pty Ltd, All Rights Reserved. MCC17028E • SB0093 • r1 • Created in AU